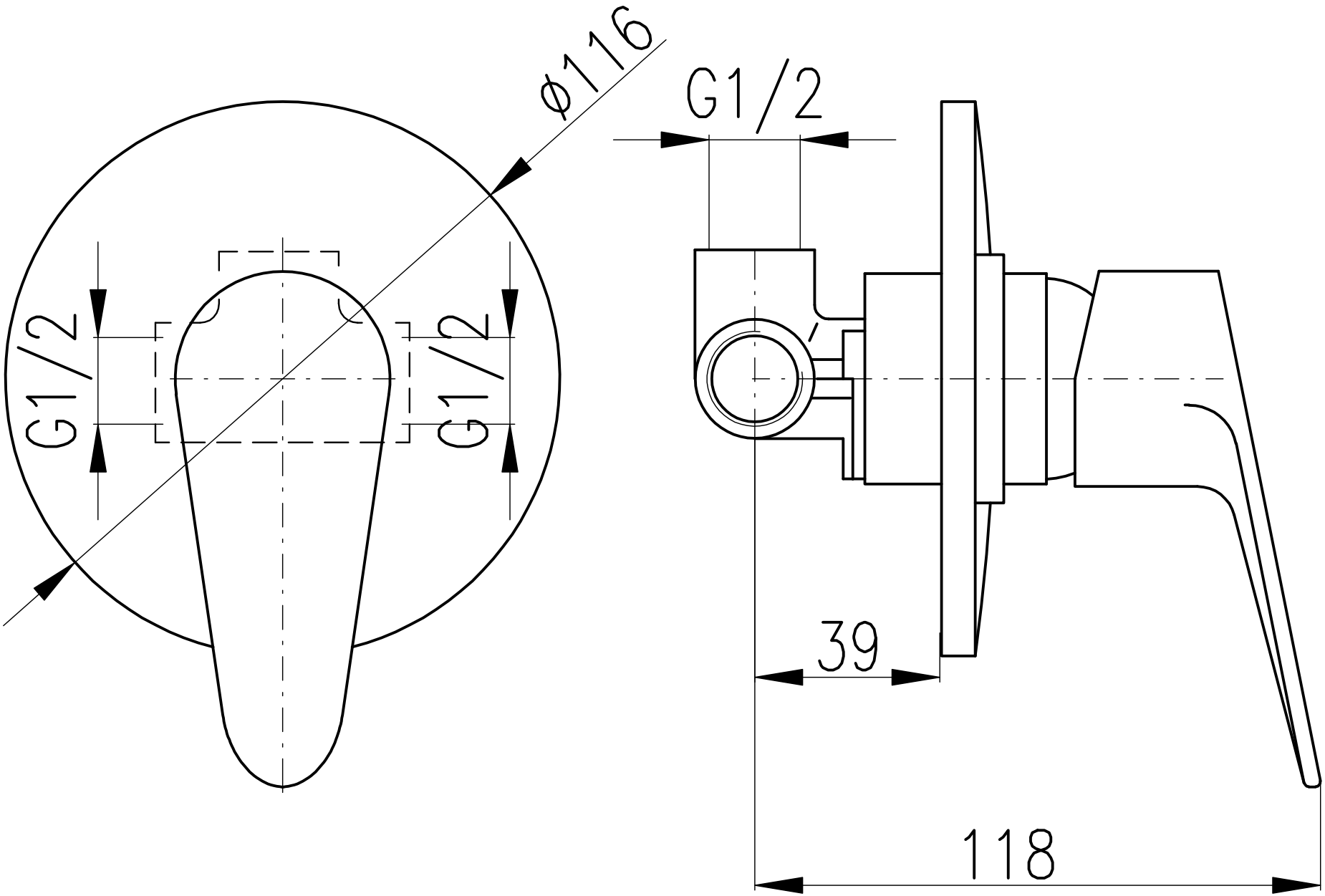
ø116
G1/2
G1/2
G1/2
39
118