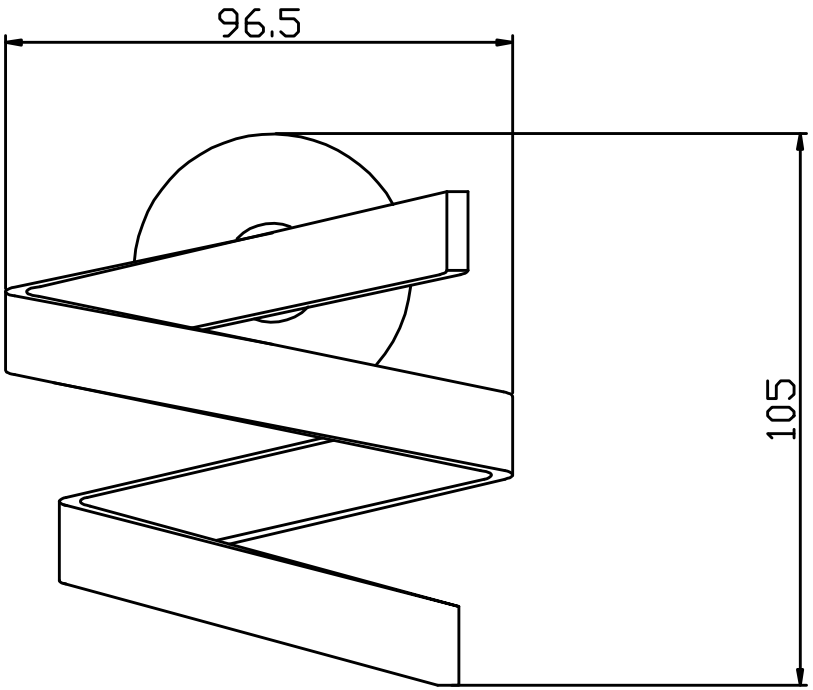
96.5
105

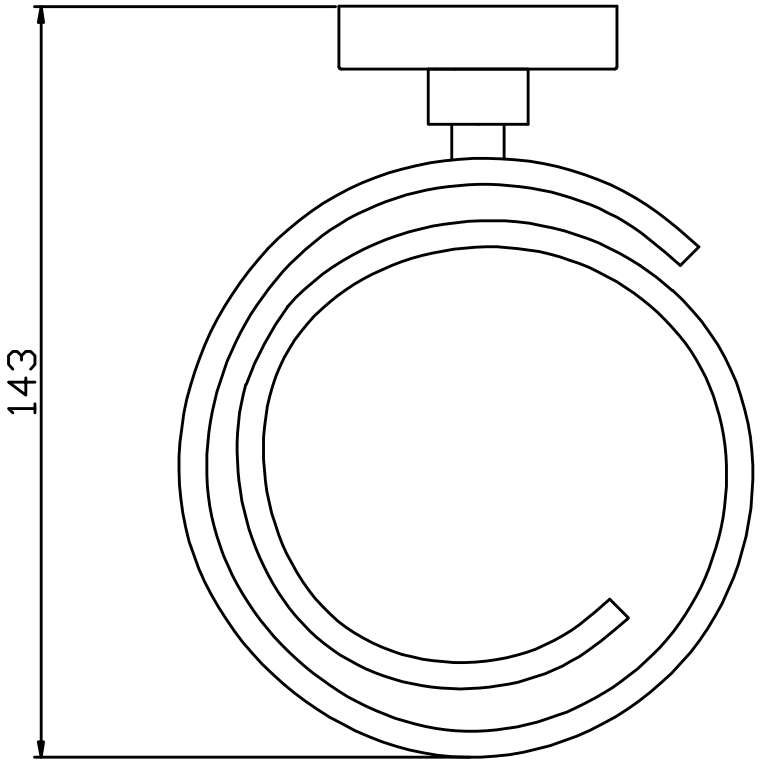
143