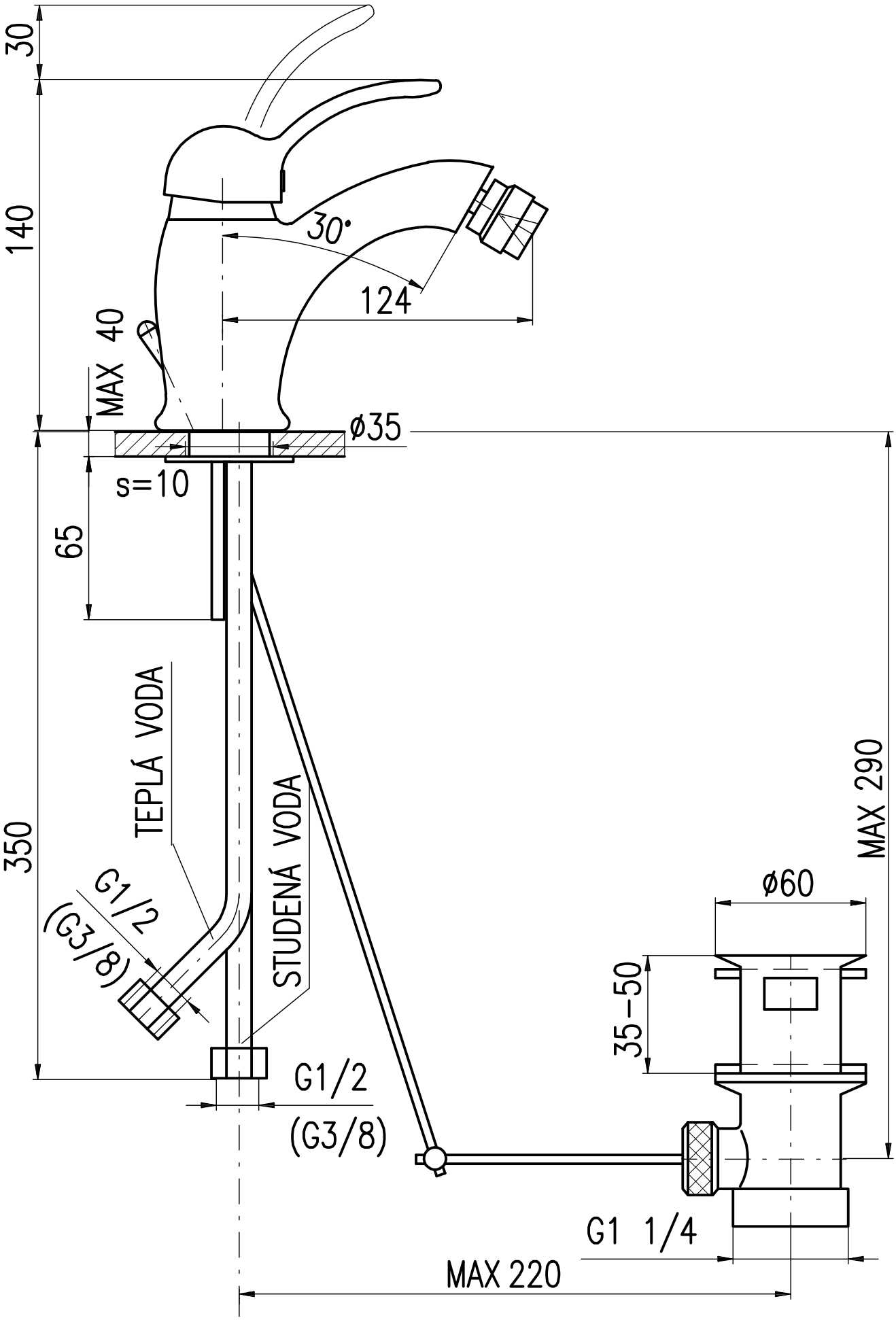
30
140
30°
124
MAX 40
ø35
s=10
65
350
TEPLÁ VODA
STUDENÁ VODA
G1/2
(G3/8)
G1/2
(G3/8)
MAX 290
ø60
35–50
G1 1/4
MAX 220

L045