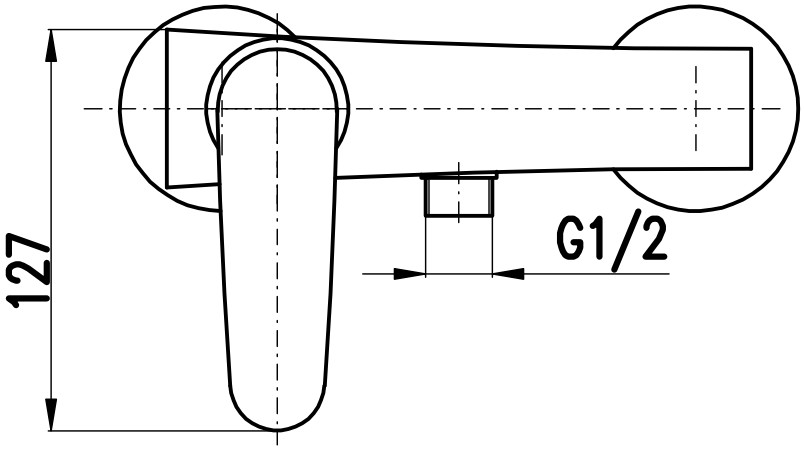
127
G1/2

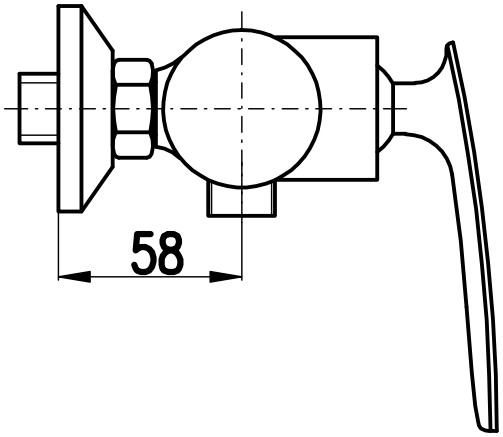
58

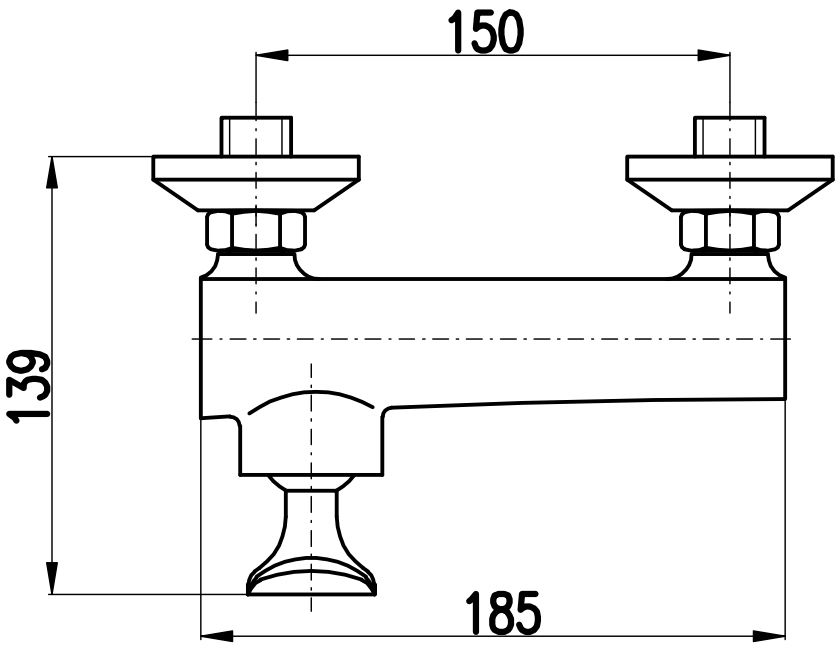
150
139
185