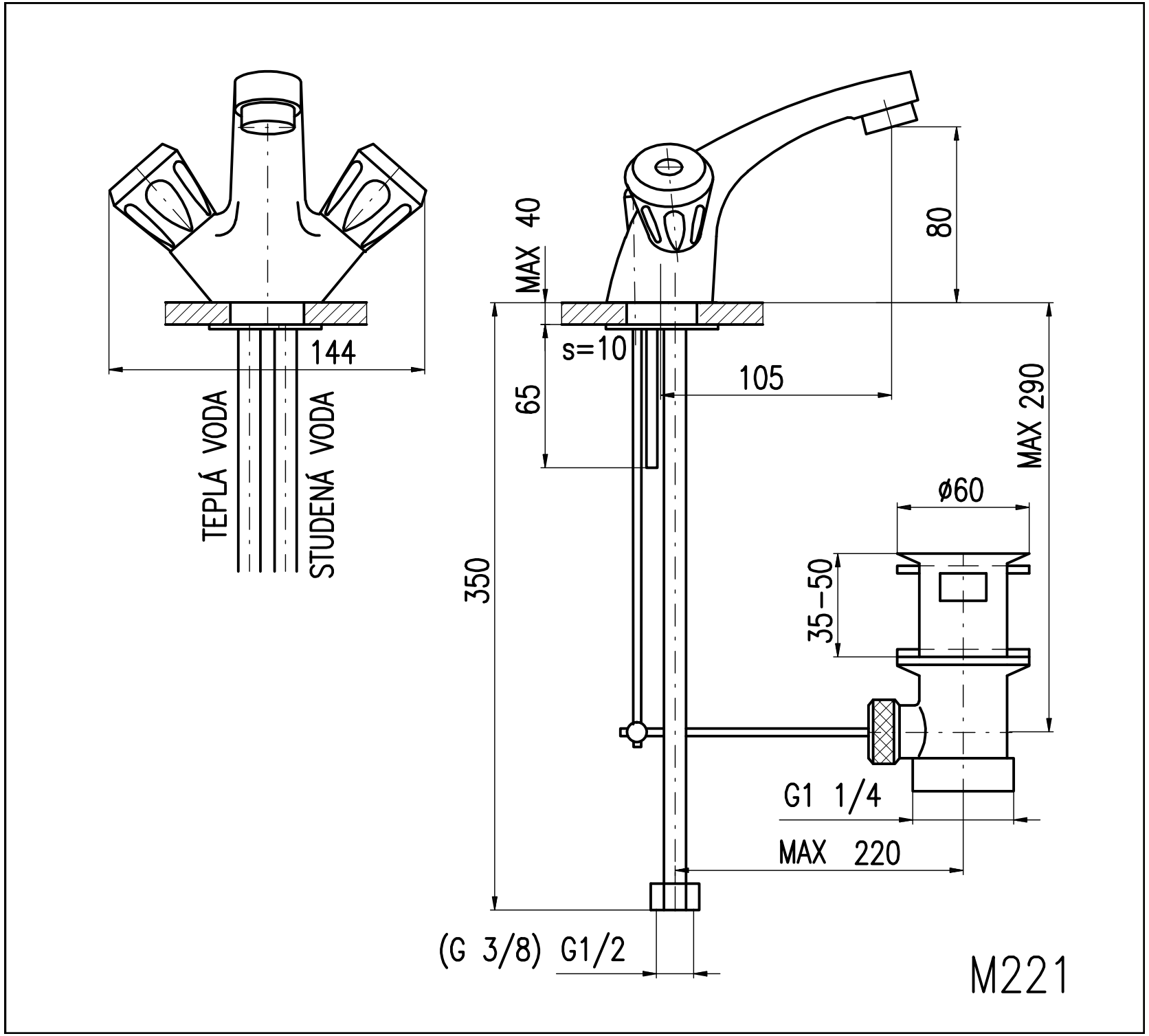
144
TEPLÁ VODA
STUDENÁ VODA
MAX 40
s=10
65
350
105
80
MAX 290
ø60
35–50
G1 1/4
MAX 220
(G 3/8) G1/2
M221