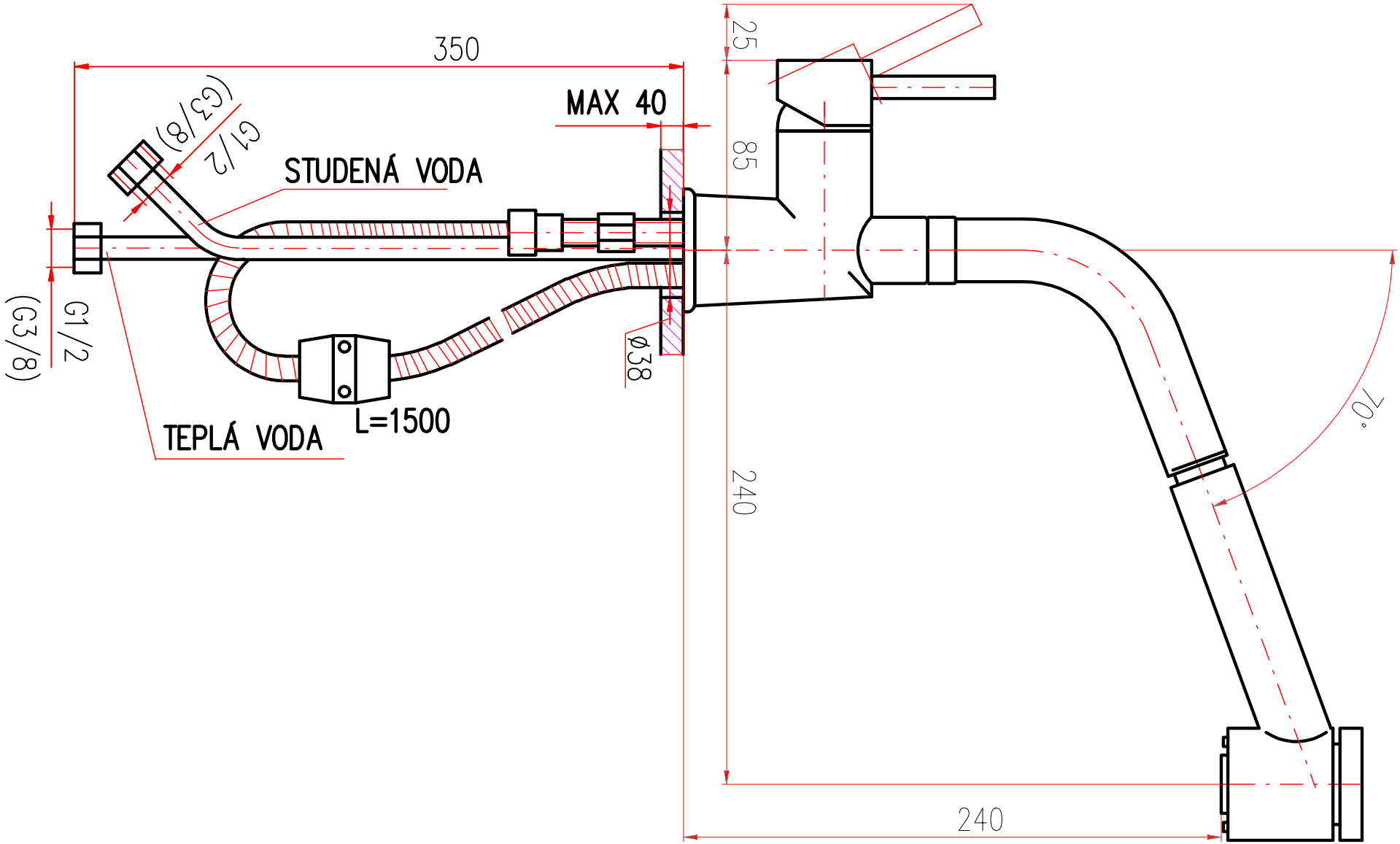
350
MAX 40
25
85
240
240
70°
G1/2
(G3/8)
G1/2
(G3/8)
STUDENÁ VODA
TEPLÁ VODA
L=1500
ø38